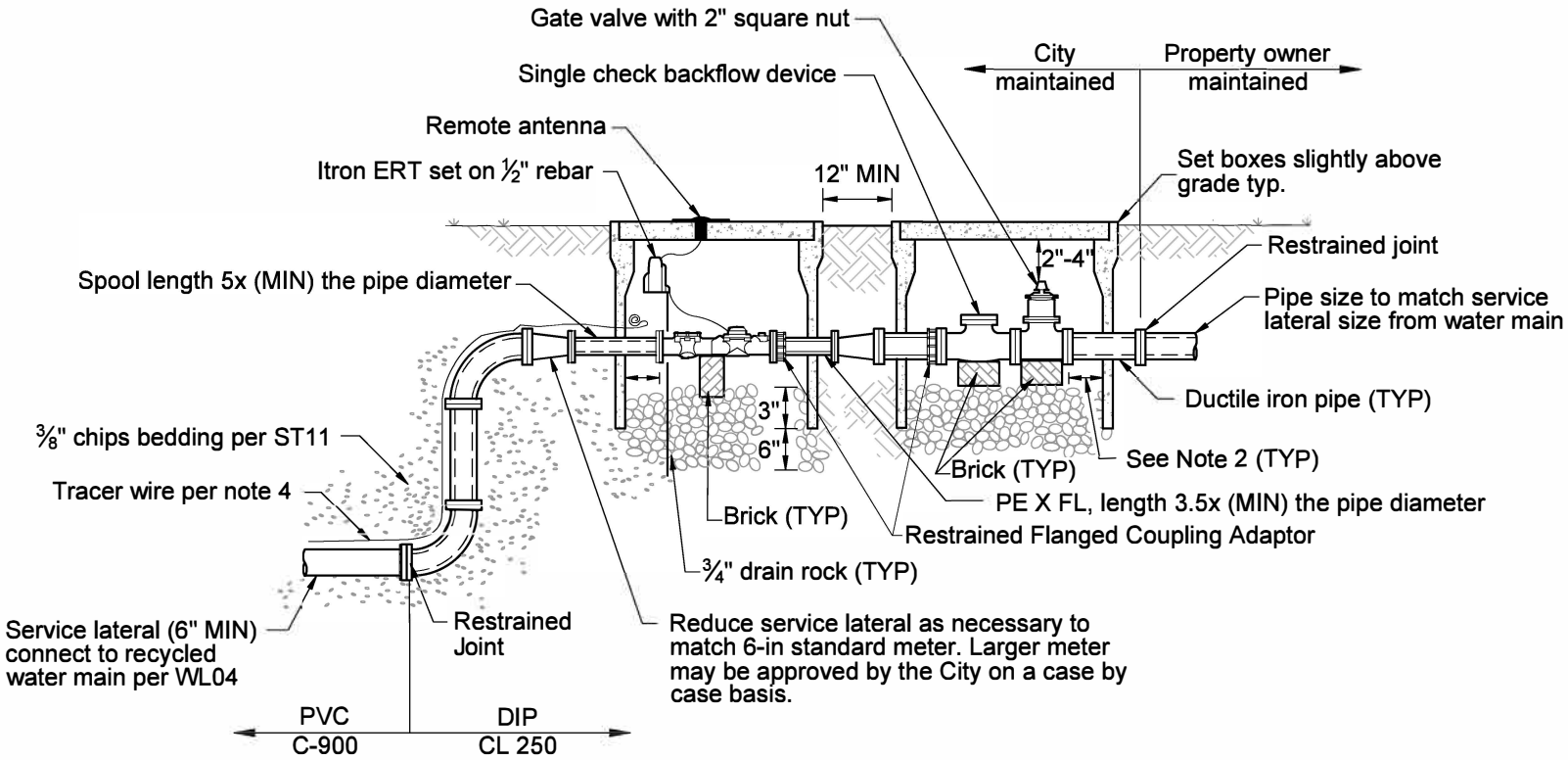

NOTES:

1. Meter and backflow devices shall be located in a non-paved area where boxes are not subject to traffic loading.
2. Maintain 2"-4" clearance between box wall and pipe fitting (TYP all sides).
3. All Ductile Iron pipe and fittings shall be provided with a bituminous coating from the factory and encased in an 8-mil polyethylene bag in the field in accordance with AWWA C-105. All bolts, restraining rods, etc. shall be coated with bitumastic prior to encasement in the polyethylene bag.
4. Use City approved restrained joints or flanged spools.
5. Copper tracer wire (10 gauge insulated solid wire) shall be taped to pipe at 4' intervals and run continuous from the water main and terminate with 2' MIN length coil exposed in meter box.
6. Water meter and ERT shall be purchased through the City. Purchase includes installation.
7. Prior to backfilling, the entire water service line will be inspected by the City Inspector. Entire water line is shall be leak free under pressure. Any portion of the service line or fittings not inspected or damaged will not be accepted.

CITY OF HEALDSBURG
CALIFORNIA
SINCE 1867

Recycled Water Service

All Meter Sizes

SCALE: NONE

APPROVED: Larry Zimmer
Director of Public Works Larry Zimmer

DATE: June 2024

RW01

STANDARD DETAIL